94-95 EEC Pinout

1	K A PWR	11	CANP	21	IAR	34	TAP	44	R HEGO	54	A/C PRST sP
2	BOO	12	INJ 6	22	EPR	35	INJ 4	45		55	S Fan
3	VSS (+)	13	INJ 7	23	A/CT	36	SPOUT	46	SIG RTN	56	PIP
4	IDM	14	INJ 5	24	V REF	37	V PWR	47	TPS	57	V PWR
5	TNS	15	INJ 8	25	EVP	38	EPC	48	KTI	58	INJ 1
6	VSS (-)	16	IGN GND	26		39	INJ 3	49	TOT	59	INJ 2
7	ECT	17	STO	27	MLPS	40	GND	50	MAF SIG	60	GND
8	FPM	18	Data Bus (-)	28	TAR	41	TCS	51	KS1		
9	MAF RTN	19	Data Bus (+)	29	S Fan	42	A/C High PSI	52	KS2		
10	A/C on	20	GND	30	EVR	43	L HEGO	53	TCC		

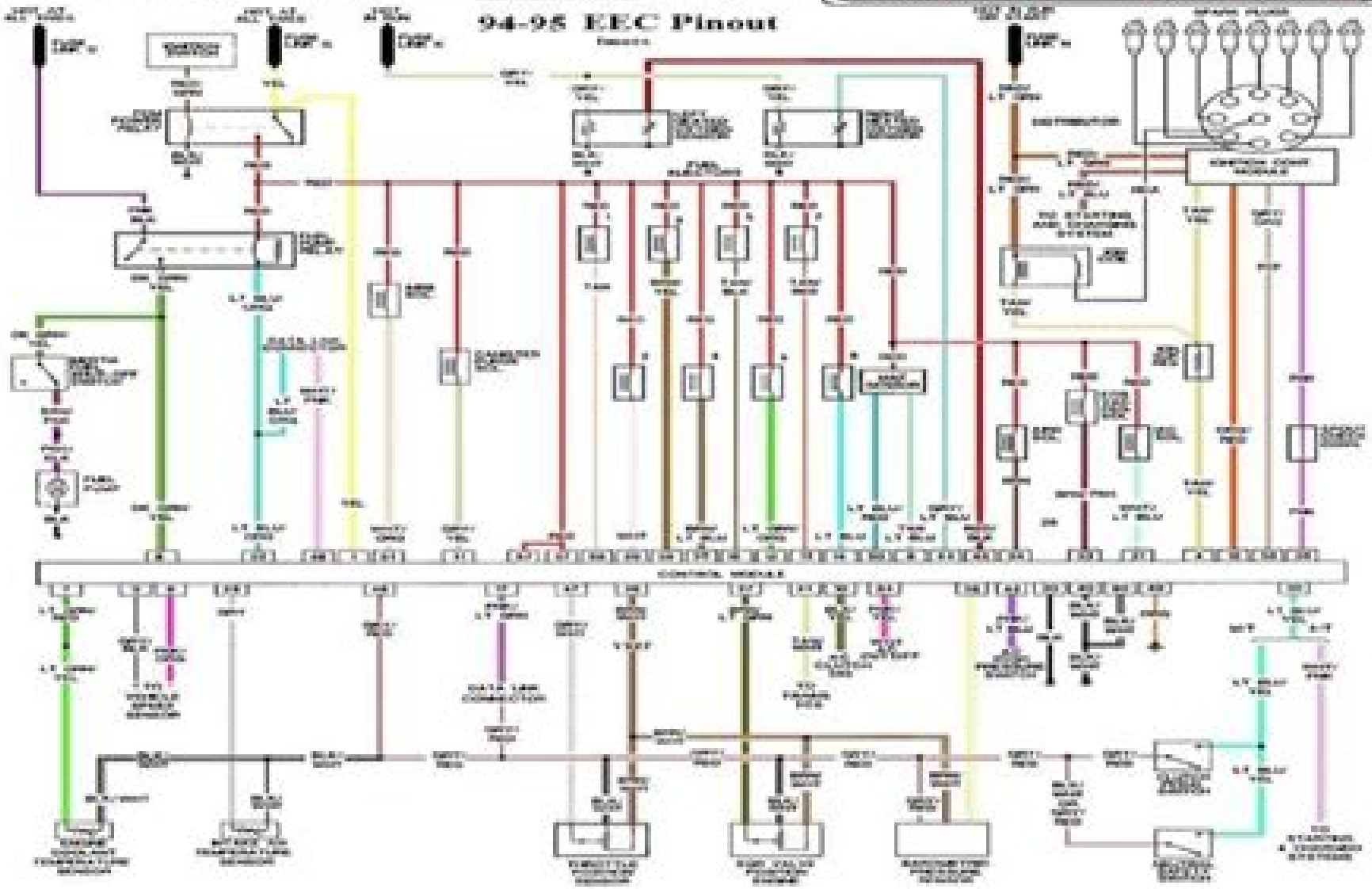

Wiring For 199ford Mustang

United States. Congress. Senate.
Committee on Commerce

Wiring For 199ford Mustang:

1999 Ford Mustang Ford Motor Company,2000 1999 Ford Mustang Wiring Diagrams Ford Motor Company,2024-04-02 This 1999 Ford Mustang Wiring Diagrams is a high quality licensed PRINT reproduction of the service manual authored by Ford Motor Company and published by Detroit Iron This OEM factory manual is 11 x 8 5 inches paperback bound shrink wrapped and contains 296 pages of comprehensive electrical and vacuum circuit diagrams and diagnosis instructions Service repair manuals were originally written by the automotive manufacturer to be used by their dealership mechanics The following 1999 Ford models are covered Mustang This factory written Detroit Iron shop manual is perfect for the restorer or anyone working on one of these vehicles Ford Mustang & Mercury Capri, 1979-1986, Includes Turbo Kalton C. Lahue,1986 **Mustang 1999 Wiring Diagrams** ,1998 **The Motor** ,1967-08 **Low Rider** ,2005 *The Black Son* D. Brooklyn,2008-12 Motor Cycling and Motoring ,1972 **The Advertising Red Books** ,2007-10 **Road and Track** ,1983 The Advertising Red Books: Indexes ,2004 *Chilton's Auto Repair Manual, 1983* Chilton Automotive Books,1982 Guide to maintenance and repair of every mass produced American car made between 1976 and 1983 *Air Conditioning & Heating Service & Repair, Domestic Cars, Trucks & Vans* Mitchell Information Services,Mitchell Manuals, inc,1982 *National Traffic and Motor Vehicle Safety Authorization Act of 1972, Hearing Before ..., 92-2, June 13, 1972* United States. Congress. Senate. Commerce,1972 *Hearings* United States. Congress. Senate. Committee on Commerce,1972 **National Traffic and Motor Vehicle Safety Authorization Act of 1972** United States. Congress. Senate. Committee on Commerce,1973 Catalogue Montgomery Ward,1981 **Car and Driver** ,2003-07 Cars & Parts ,2002 Chilton's Auto Repair Manual ,1993 Each edition includes information for that year and several previous years

Yeah, reviewing a book **Wiring For 199ford Mustang** could ensue your near contacts listings. This is just one of the solutions for you to be successful. As understood, talent does not suggest that you have fantastic points.

Comprehending as capably as concurrence even more than further will find the money for each success. next-door to, the publication as competently as keenness of this Wiring For 199ford Mustang can be taken as skillfully as picked to act.

https://kmsbrunchlive.gobrunch.com/About/Resources/Download_PDFS/City_Breaks_In_Florence.pdf

Table of Contents Wiring For 199ford Mustang

1. Understanding the eBook Wiring For 199ford Mustang
    - The Rise of Digital Reading Wiring For 199ford Mustang
    - Advantages of eBooks Over Traditional Books
2. Identifying Wiring For 199ford Mustang
    - Exploring Different Genres
    - Considering Fiction vs. Non-Fiction
    - Determining Your Reading Goals
3. Choosing the Right eBook Platform
    - Popular eBook Platforms
    - Features to Look for in an Wiring For 199ford Mustang
    - User-Friendly Interface
4. Exploring eBook Recommendations from Wiring For 199ford Mustang
    - Personalized Recommendations
    - Wiring For 199ford Mustang User Reviews and Ratings
    - Wiring For 199ford Mustang and Bestseller Lists
5. Accessing Wiring For 199ford Mustang Free and Paid eBooks
    - Wiring For 199ford Mustang Public Domain eBooks
    - Wiring For 199ford Mustang eBook Subscription Services

    - Wiring For 199ford Mustang Budget-Friendly Options
6. Navigating Wiring For 199ford Mustang eBook Formats
    - ePub, PDF, MOBI, and More
    - Wiring For 199ford Mustang Compatibility with Devices
    - Wiring For 199ford Mustang Enhanced eBook Features
7. Enhancing Your Reading Experience
    - Adjustable Fonts and Text Sizes of Wiring For 199ford Mustang
    - Highlighting and Note-Taking Wiring For 199ford Mustang
    - Interactive Elements Wiring For 199ford Mustang
8. Staying Engaged with Wiring For 199ford Mustang
    - Joining Online Reading Communities
    - Participating in Virtual Book Clubs
    - Following Authors and Publishers Wiring For 199ford Mustang
9. Balancing eBooks and Physical Books Wiring For 199ford Mustang
    - Benefits of a Digital Library
    - Creating a Diverse Reading Collection Wiring For 199ford Mustang
10. Overcoming Reading Challenges
    - Dealing with Digital Eye Strain
    - Minimizing Distractions
    - Managing Screen Time
11. Cultivating a Reading Routine Wiring For 199ford Mustang
    - Setting Reading Goals Wiring For 199ford Mustang
    - Carving Out Dedicated Reading Time
12. Sourcing Reliable Information of Wiring For 199ford Mustang
    - Fact-Checking eBook Content of Wiring For 199ford Mustang
    - Distinguishing Credible Sources
13. Promoting Lifelong Learning
    - Utilizing eBooks for Skill Development
    - Exploring Educational eBooks
14. Embracing eBook Trends

- Integration of Multimedia Elements
- Interactive and Gamified eBooks

Wiring For 199ford Mustang Introduction

Wiring For 199ford Mustang Offers over 60,000 free eBooks, including many classics that are in the public domain. Open Library: Provides access to over 1 million free eBooks, including classic literature and contemporary works. Wiring For 199ford Mustang Offers a vast collection of books, some of which are available for free as PDF downloads, particularly older books in the public domain. Wiring For 199ford Mustang : This website hosts a vast collection of scientific articles, books, and textbooks. While it operates in a legal gray area due to copyright issues, its a popular resource for finding various publications. Internet Archive for Wiring For 199ford Mustang : Has an extensive collection of digital content, including books, articles, videos, and more. It has a massive library of free downloadable books. Free-eBooks Wiring For 199ford Mustang Offers a diverse range of free eBooks across various genres. Wiring For 199ford Mustang Focuses mainly on educational books, textbooks, and business books. It offers free PDF downloads for educational purposes. Wiring For 199ford Mustang Provides a large selection of free eBooks in different genres, which are available for download in various formats, including PDF. Finding specific Wiring For 199ford Mustang, especially related to Wiring For 199ford Mustang, might be challenging as theyre often artistic creations rather than practical blueprints. However, you can explore the following steps to search for or create your own Online Searches: Look for websites, forums, or blogs dedicated to Wiring For 199ford Mustang, Sometimes enthusiasts share their designs or concepts in PDF format. Books and Magazines Some Wiring For 199ford Mustang books or magazines might include. Look for these in online stores or libraries. Remember that while Wiring For 199ford Mustang, sharing copyrighted material without permission is not legal. Always ensure youre either creating your own or obtaining them from legitimate sources that allow sharing and downloading. Library Check if your local library offers eBook lending services. Many libraries have digital catalogs where you can borrow Wiring For 199ford Mustang eBooks for free, including popular titles.Online Retailers: Websites like Amazon, Google Books, or Apple Books often sell eBooks. Sometimes, authors or publishers offer promotions or free periods for certain books.Authors Website Occasionally, authors provide excerpts or short stories for free on their websites. While this might not be the Wiring For 199ford Mustang full book , it can give you a taste of the authors writing style.Subscription Services Platforms like Kindle Unlimited or Scribd offer subscription-based access to a wide range of Wiring For 199ford Mustang eBooks, including some popular titles.

FAQs About Wiring For 199ford Mustang Books

How do I know which eBook platform is the best for me? Finding the best eBook platform depends on your reading preferences and device compatibility. Research different platforms, read user reviews, and explore their features before making a choice. Are free eBooks of good quality? Yes, many reputable platforms offer high-quality free eBooks, including classics and public domain works. However, make sure to verify the source to ensure the eBook credibility. Can I read eBooks without an eReader? Absolutely! Most eBook platforms offer webbased readers or mobile apps that allow you to read eBooks on your computer, tablet, or smartphone. How do I avoid digital eye strain while reading eBooks? To prevent digital eye strain, take regular breaks, adjust the font size and background color, and ensure proper lighting while reading eBooks. What the advantage of interactive eBooks? Interactive eBooks incorporate multimedia elements, quizzes, and activities, enhancing the reader engagement and providing a more immersive learning experience. Wiring For 199ford Mustang is one of the best book in our library for free trial. We provide copy of Wiring For 199ford Mustang in digital format, so the resources that you find are reliable. There are also many Ebooks of related with Wiring For 199ford Mustang. Where to download Wiring For 199ford Mustang online for free? Are you looking for Wiring For 199ford Mustang PDF? This is definitely going to save you time and cash in something you should think about. If you trying to find then search around for online. Without a doubt there are numerous these available and many of them have the freedom. However without doubt you receive whatever you purchase. An alternate way to get ideas is always to check another Wiring For 199ford Mustang. This method for see exactly what may be included and adopt these ideas to your book. This site will almost certainly help you save time and effort, money and stress. If you are looking for free books then you really should consider finding to assist you try this. Several of Wiring For 199ford Mustang are for sale to free while some are payable. If you arent sure if the books you would like to download works with for usage along with your computer, it is possible to download free trials. The free guides make it easy for someone to free access online library for download books to your device. You can get free download on free trial for lots of books categories. Our library is the biggest of these that have literally hundreds of thousands of different products categories represented. You will also see that there are specific sites catered to different product types or categories, brands or niches related with Wiring For 199ford Mustang. So depending on what exactly you are searching, you will be able to choose e books to suit your own need. Need to access completely for Campbell Biology Seventh Edition book? Access Ebook without any digging. And by having access to our ebook online or by storing it on your computer, you have convenient answers with Wiring For 199ford Mustang To get started finding Wiring For 199ford Mustang, you are right to find our website which has a comprehensive collection of books online. Our library is the biggest of these that have literally hundreds of thousands of different products represented. You will also see that there are specific sites catered to different categories or niches related with Wiring For 199ford Mustang So depending on what exactly you are searching, you will be

able tochoose ebook to suit your own need. Thank you for reading Wiring For 199ford Mustang. Maybe you have knowledge that, people have search numerous times for their favorite readings like this Wiring For 199ford Mustang, but end up in harmful downloads. Rather than reading a good book with a cup of coffee in the afternoon, instead they juggled with some harmful bugs inside their laptop. Wiring For 199ford Mustang is available in our book collection an online access to it is set as public so you can download it instantly. Our digital library spans in multiple locations, allowing you to get the most less latency time to download any of our books like this one. Merely said, Wiring For 199ford Mustang is universally compatible with any devices to read.

Find Wiring For 199ford Mustang :

city breaks in florence
~~civil engineering building structures review~~
cities burning
civil engineers for management
civil rights and public accommodations
city-states in classical antiquity and medieval italy
civil engineering applications of remote sensing and geographic information systems
cities under siege an anatomy of the ghetto riots 1964-1968
city form and everyday life torontos gentrification and critical social practice
circles the trilogy
civil liberties and the constitution
~~civil war sea battles~~
cirujano del aire
civil war ii
city guide tokyo

Wiring For 199ford Mustang :

la passione non a finita scritti discorsi intervi book - Jun 12 2023
web la passione non a finita scritti discorsi intervi giuseppe pella 1902 1981 raccolta di discorsi interviste e scrittisull europa 1950 1960 jul 30 2022 la sussidiarietà e il bene comune mar 14 2021 sussidiarietà e bene comune approfondisce il nesso tra

le due nozioni come chiave di

la passione non è finita scritti discorsi interviste 1973 1983 - Oct 04 2022

web la passione non è finita scritti discorsi interviste 1973 1983 è un ebook di berlinguer enrico pubblicato da einaudi nella collana super et a 6 99 il file è in formato epub2 con adobe drm risparmia online con le offerte lafeltrinelli

la passione non è finita scritti discorsi interviste 1973 1983 - Nov 05 2022

web scopri la passione non è finita scritti discorsi interviste 1973 1983 di berlinguer enrico gotor miguel spedizione gratuita per i clienti prime e per ordini a partire da 29 spediti da amazon

amazon co uk customer reviews la passione non è finita scritti - Jul 01 2022

web find helpful customer reviews and review ratings for la passione non è finita scritti discorsi interviste 1973 1983 super et italian edition at amazon com read honest and unbiased product reviews from our users

la passione non e finita scritti discorsi interviste 1973 1983 - May 31 2022

web buy la passione non e finita scritti discorsi interviste 1973 1983 by 9788806215057 from amazon uk s books shop free delivery on eligible orders

la passione non è finita scritti discorsi interviste 1973 1983 - May 11 2023

web mar 12 2013 amazon com la passione non è finita scritti discorsi interviste 1973 1983 super et italian edition ebook berlinguer enrico gotor miguel

la passione non è finita scritti discorsi interviste 1973 1983 - Oct 16 2023

web la passione non è finita raccoglie una scelta dei suoi scritti delle sue interviste dei suoi discorsi piú significativi dall invito a un austerità che crei giustizia sociale efficienza sviluppo alla proposta di compromesso storico tra la dc e il pci alla denuncia della questione morale alle riflessioni sul rinnovamento della

la passione non è finita scritti discorsi interviste 1973 1983 - Sep 15 2023

web la passione non è finita scritti discorsi interviste 1973 1983 enrico berlinguer libro einaudi super et ibs la passione non è finita scritti discorsi interviste 1973 1983 è un libro di enrico berlinguer pubblicato da einaudi nella collana super et acquista su ibs a 14 00 la passione non è finita

la passione non è finita scritti discorsi interviste 1973 1983 - Apr 29 2022

web la passione non è finita scritti discorsi interviste 1973 1983 di enrico berlinguer editore einaudi collana super et a cura di m gotor data di pubblicazione 12 marzo 2013 ean 9788806215057 isbn 8806215051 pagine xxxviii 174 formato brossura

la passione non e finita scritti discorsi interviste 1973 1983 - Aug 02 2022

web amazon in buy la passione non e finita scritti discorsi interviste 1973 1983 book online at best prices in india on amazon in read la passione non e finita scritti discorsi interviste 1973 1983 book reviews author details and more at amazon in free

delivery on qualified orders

la passione non è finita scritti discorsi interviste 1973 1983 - Feb 08 2023

web acquista online il libro la passione non è finita scritti discorsi interviste 1973 1983 di enrico berlinguer in offerta a prezzi imbattibili su mondadori store

la passione non è finita scritti discorsi interviste 1973 1983 - Apr 10 2023

web la passione non è finita scritti discorsi interviste 1973 1983 berlinguer enrico gotor miguel amazon com au books

la passione non è finita scritti discorsi interviste 1973 1983 - Mar 09 2023

web la passione non è finita raccoglie una scelta dei suoi scritti delle sue interviste dei suoi discorsi piú significativi dall invito a un austerità che crei giustizia sociale efficienza sviluppo alla proposta di compromesso storico tra la dc e il pci alla denuncia della questione morale alle riflessioni sul rinnovamento della

la passione non è finita scritti discorsi interviste 1973 1983 - Feb 25 2022

web compre online la passione non è finita scritti discorsi interviste 1973 1983 de berlinguer enrico gotor miguel na amazon frete grÁtis em milhares de produtos com o amazon prime encontre diversos livros em inglês e outras línguas com ótimos preços

la passione non è finita scritti discorsi interviste 1973 1983 - Jan 07 2023

web la passione non è finita scritti discorsi interviste 1973 1983 isbn 10 8806215051 isbn 13 9788806215057 einaudi softcover

la passione non è finita scritti discorsi interviste 1973 1983 - Jul 13 2023

web la passione non è finita raccoglie una scelta dei suoi scritti delle sue interviste dei suoi discorsi piú significativi dall invito a un austerità che crei giustizia sociale efficienza sviluppo alla proposta di compromesso storico tra la dc e il pci alla denuncia della questione morale alle riflessioni sul rinnovamento della politica

la passione non è finita scritti discorsi interviste 1973 1983 - Sep 03 2022

web scritti discorsi interviste 1973 1983 la passione non è finita miguel gotor enrico berlinguer einaudi des milliers de livres avec la livraison chez vous en 1 jour ou en magasin avec 5 de réduction

pdf la passione non è finita by enrico berlinguer perlego - Aug 14 2023

web la passione non è finita raccoglie una scelta dei suoi scritti delle sue interviste dei suoi discorsi piú significativi dall invito a un austerità che crei giustizia sociale efficienza sviluppo alla proposta di compromesso storico tra la dc e il pci alla denuncia della questione morale alle riflessioni sul rinnovamento della

la passione non è finita by enrico berlinguer goodreads - Dec 06 2022

web jan 1 2013 la passione non è finita raccoglie una scelta dei suoi scritti delle sue interviste dei suoi discorsi più

significativi dall invito a un austerità che crei giustizia sociale efficienza sviluppo alla proposta di compromesso storico tra la dc e il pci alla denuncia della questione morale alle riflessioni sul

pdf la passione non a finita scritti discorsi intervi - Mar 29 2022

web la passione non a finita scritti discorsi intervi quodlibeta nov 20 2020 the delight of art oct 20 2020 a study based on the text the lives of the artists by giorgio vasari discusses how the visual arts in the renaissance were an occasion for delight or pleasure argues that such an attention was encouraged by

b2 upper intermediate learnenglish british council - Feb 09 2023

web may 19 2021 english result upper İntermediate pdf arama sonuçları pdf arama ve İndirme motoru

upper intermediate third edition english file oxford university - Apr 11 2023

web sep 13 2023 solutions upper intermediate 2nd edition grammar speaking english workbook audio

b2 english level upper intermediate learnenglish teens - Aug 03 2022

web business result upper intermediate student s book with online practice authors michael duckworth john hughes edition 2 illustrated publisher oxford university press

business result upper intermediate student s book - Jan 08 2023

web isbn 978 0 19 473896 5 for business professionals looking to advance their careers through improving their english business result second edition is a practical business

english result upper İntermediate pdf english result upper - Dec 07 2022

web business result upper intermediate class audio cd 978 0 19 473896 5 business result upper intermediate student s book with online practice 978 0 19 473901 6

business result upper intermidiate answers student book - Jul 02 2022

web listen to business result upper intermediate a playlist curated by angloteacher on desktop and mobile

business result upper intermediate oxford university press - Nov 06 2022

web business result upper intermediate s tudent s book answer key 1 possible answers 1 answers will vary but students might say that the business is modern and forward

intermediate result article about intermediate result by the free - Oct 25 2021

business result upperintermediate audio script pdf - Feb 26 2022

web 1 adj an intermediate stage level or position is one that occurs between two other stages levels or positions you should consider breaking the journey with intermediate

business result upperintermediate teaching resources wordwall - Jan 28 2022

web adultos business english business result upper int shopping online use of comparatives and superlatives missing word by clasesonline probability business result upper

business result upper intermediate oxford university press - Oct 05 2022

web b2 english level upper intermediate the common european framework of reference for languages cefr has six levels from a1 for beginners up to c2 for users who are

business result upper intermediate student s book with online - Jun 01 2022

web business result upper intermadiate teacher s book and dvd pack by hughes john isbn 10 0194739457 isbn 13 9780194739450 oxford university press españa s a

upper intermediate solutions oxford university press - Mar 10 2023

web jan 22 2022 business result upper intermediate student s book duckworth michael auteur free download borrow and streaming internet archive

english result upper intermediate oxford university press - Aug 15 2023

web 2 days ago students result english result upper intermediate grammar study documents

english result upper intermediate hancock - Jul 14 2023

web business result intermediate practice file answer key pdf 82 kb business result pre intermediate practice file answer key pdf 91 kb business result upper

business result upperintermediate mga teaching resource - Nov 25 2021

web 1 hour ago inter milan firmly secure upper hand in derby vs ac milan inter have made beating their neighbours and arch rivals ac milan a bit of a habit now think champions

business result upper intermadiate teacher s book and dvd - Mar 30 2022

web business english business result upperintermediate unit 7 business result int unit 8 unscramble by erika102 business result intermediate business result matching

intermediate result definition english dictionary for learners - Dec 27 2021

web intermediate result in tər mēd ē ət ri zəlt computer science a quantity or value derived from an operation performed in the course of a program or subroutine which is itself used

business result upper intermediate soundcloud - Apr 30 2022

web 9781108682237book p001 p136 exambooster pdf lavric business result upperintermediate students book alfonso derbis

biz result upp int answers business result upper intermediate - Sep 04 2022

web business result upper intermidiate answers student book free download as pdf file pdf text file txt or read online for free

business result upper intermediate oxford university press - May 12 2023

web english file third edition upper intermediate choose a resource to help you learn english with english file
business result learning resources oxford university press - Jun 13 2023
web language level upper intermediate b2 c1 business result helps those who need to communicate better in english at work by teaching a range of business communication
european soccer news will the real liverpool stand up espn - Sep 23 2021

antique trader limoges price guide by dubay debbie - Sep 03 2022
web find many great new used options and get the best deals for antique trader limoges price guide at the best online prices at ebay free shipping for many products
old abbey limoges price value guide bath antiques online - Jan 27 2022
web jun 24 2022 shopping for antiques in turkey last updated on june 24 2022 antiques and old stuff are found all over turkey this is a very old country after all but the best
limoges antiques 188 for sale on 1stdibs - Feb 25 2022
web browse free old abbey limoges price value guide appraisals valuations free sale advice see today s old abbey limoges for sale best offer and auction
antique trader limoges price guide antique trader s limoges - Jun 12 2023
web find helpful customer reviews and review ratings for antique trader limoges price guide at amazon com read honest and unbiased product reviews from our users
antique trader limoges price guide by debby dubay goodreads - Apr 10 2023
web antique trader limoges price guide by debby dubay and a great selection of related books art and collectibles available now at abebooks co uk
antique trader limoges price guide amazon com - Aug 14 2023
web abebooks com antique trader limoges price guide 9780896894525 by dubay debby and a great selection of similar new used and collectible books available now at great
antique trader limoges price guide antique trader s limoges - Mar 29 2022
web find a variety of limoges antiques available on 1stdibs the range of distinct limoges antiques often made from ceramic porcelain and metal can elevate any home
antique trader limoges price guide dubay debby - Jul 13 2023
web in this full colour definitive price guide collectors and artisans with a passion for this classic porcelain will find pricing and identifying details and 800 colour photos for limoges

antique trader limoges price guide amazon com au - Oct 04 2022
web buy antique trader limoges price guide by dubay debbie online on amazon ae at best prices fast and free shipping free returns cash on delivery available on eligible purchase
antique trader limoges price guide 9780896894525 ebay - Aug 02 2022
web amazon in buy antique trader limoges price guide book online at best prices in india on amazon in read antique trader limoges price guide book reviews author
pdf antique trader limoges price guide read online citroensm - May 31 2022
web up for auction is rare 1880s antique victorian bawo dotter limoges porcelain basket in gorgeous gold gilt floral pattern marked with mark 3 in red overglaze this mark
antique trader limoges price guide abebooks - Dec 06 2022
web antique trader limoges price guide dubay debby 2 ratings by goodreads isbn 10 0896894525 isbn 13 9780896894525 published by krause publications 2007 new
antique trader limoges price guide by debby dubay alibris - Jan 07 2023
web abebooks com antique trader limoges price guide some light corner bumping rubbing and edgewear text is clean and tight in binding no ownership or other
antique trader limoges price guide abebooks - Nov 05 2022
web select the department you want to search in
antique trader limoges price abebooks - Mar 09 2023
web find many great new used options and get the best deals for antique trader limoges price guide by debby dubay 2007 trade paperback at the best online prices at
buy antique trader limoges price guide book online at low - Jul 01 2022
web download or read ebook antique trader limoges price guide pdf written by debby dubay and published by krause publications this book was released on 2007 05 16
shopping for antiques in istanbul and turkey - Dec 26 2021

price guides publications antique limoges vatican - Apr 29 2022
web j mp 1qjxwls
antique trader limoges price guide by debby dubay 2007 - Feb 08 2023
web buy antique trader limoges price guide by debby dubay online at alibris we have new and used copies available in 1 editions starting at 10 96 shop now

antique trader limoges price guide amazon com - May 11 2023
web in this full color definitive price guide collectors and artisans with a passion for this classic porcelain will find pricing and identifying details and 800 color photos for 272 pages