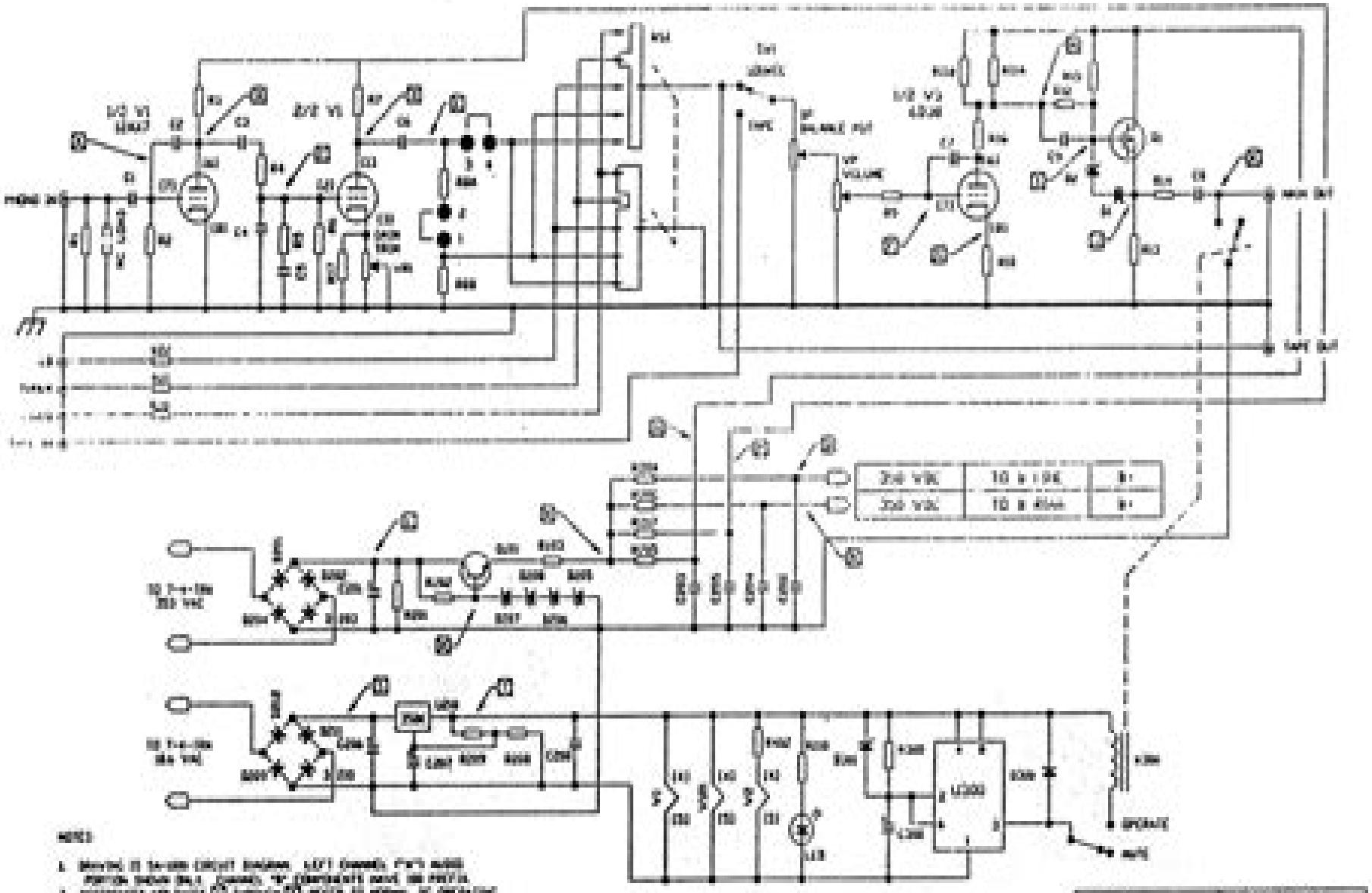

NOTES:

1. DRAWING IS SA-1000 CIRCUIT DIAGRAM. LEFT CHANNEL ("A") AUDIO PORTION SHOWN ONLY. CHANNEL "B" COMPONENTS HAVE 100 PREFIX.
2. REFERENCED VOLTAGES [X] THROUGH [Y] REFER TO NORMAL DC OPERATING VOLTAGES AS SHOWN ON DRAWING # 7002.1 "VOLTAGES, SA-1000"
3. FOR LIST OF MATERIALS, REFER TO DRAWING # 7002.3 "MATERIALS, SA-1000"
4. FOR DESCRIPTION OF CIRCUIT, REFER TO DRAWING # 7002.2 "CIRCUIT, SA-1000"
5. FOR TRANSFORMER PRIMARY CIRCUIT DETAILS, REFER TO DRAWING # 7002.7 "TRANSFORMER PRIMARY, SA-1000"
6. FOR AC SIGNAL LEVELS AT REFERENCED POINTS [X] THROUGH [Y] REFER TO DRAWING # 7002.4 "SIGNALS, SA-1000"

DRAWN	APPROVED
JME	

COUNTERPOINT

CIRCUIT DIAGRAM

20kdx 2service Manual

JS Bruner

20kdx 2service Manual:

Delve into the emotional tapestry woven by in **20kdx 2service Manual** . This ebook, available for download in a PDF format (*), is more than just words on a page; itis a journey of connection and profound emotion. Immerse yourself in narratives that tug at your heartstrings. Download now to experience the pulse of each page and let your emotions run wild.

https://kmsbrunchlive.gobrunch.com/files/scholarship/HomePages/Chiltons%20Repair%20And%20Tune%20up%20Guide%20Audi%20Fox.pdf

Table of Contents 20kdx 2service Manual

1. Understanding the eBook 20kdx 2service Manual
    - The Rise of Digital Reading 20kdx 2service Manual
    - Advantages of eBooks Over Traditional Books
2. Identifying 20kdx 2service Manual
    - Exploring Different Genres
    - Considering Fiction vs. Non-Fiction
    - Determining Your Reading Goals
3. Choosing the Right eBook Platform
    - Popular eBook Platforms
    - Features to Look for in an 20kdx 2service Manual
    - User-Friendly Interface
4. Exploring eBook Recommendations from 20kdx 2service Manual
    - Personalized Recommendations
    - 20kdx 2service Manual User Reviews and Ratings
    - 20kdx 2service Manual and Bestseller Lists
5. Accessing 20kdx 2service Manual Free and Paid eBooks
    - 20kdx 2service Manual Public Domain eBooks
    - 20kdx 2service Manual eBook Subscription Services
    - 20kdx 2service Manual Budget-Friendly Options

6. Navigating 20kdx 2service Manual eBook Formats
    - ePub, PDF, MOBI, and More
    - 20kdx 2service Manual Compatibility with Devices
    - 20kdx 2service Manual Enhanced eBook Features
7. Enhancing Your Reading Experience
    - Adjustable Fonts and Text Sizes of 20kdx 2service Manual
    - Highlighting and Note-Taking 20kdx 2service Manual
    - Interactive Elements 20kdx 2service Manual
8. Staying Engaged with 20kdx 2service Manual
    - Joining Online Reading Communities
    - Participating in Virtual Book Clubs
    - Following Authors and Publishers 20kdx 2service Manual
9. Balancing eBooks and Physical Books 20kdx 2service Manual
    - Benefits of a Digital Library
    - Creating a Diverse Reading Collection 20kdx 2service Manual
10. Overcoming Reading Challenges
    - Dealing with Digital Eye Strain
    - Minimizing Distractions
    - Managing Screen Time
11. Cultivating a Reading Routine 20kdx 2service Manual
    - Setting Reading Goals 20kdx 2service Manual
    - Carving Out Dedicated Reading Time
12. Sourcing Reliable Information of 20kdx 2service Manual
    - Fact-Checking eBook Content of 20kdx 2service Manual
    - Distinguishing Credible Sources
13. Promoting Lifelong Learning
    - Utilizing eBooks for Skill Development
    - Exploring Educational eBooks
14. Embracing eBook Trends
    - Integration of Multimedia Elements

- Interactive and Gamified eBooks

20kdx 2service Manual Introduction

In todays digital age, the availability of 20kdx 2service Manual books and manuals for download has revolutionized the way we access information. Gone are the days of physically flipping through pages and carrying heavy textbooks or manuals. With just a few clicks, we can now access a wealth of knowledge from the comfort of our own homes or on the go. This article will explore the advantages of 20kdx 2service Manual books and manuals for download, along with some popular platforms that offer these resources. One of the significant advantages of 20kdx 2service Manual books and manuals for download is the cost-saving aspect. Traditional books and manuals can be costly, especially if you need to purchase several of them for educational or professional purposes. By accessing 20kdx 2service Manual versions, you eliminate the need to spend money on physical copies. This not only saves you money but also reduces the environmental impact associated with book production and transportation. Furthermore, 20kdx 2service Manual books and manuals for download are incredibly convenient. With just a computer or smartphone and an internet connection, you can access a vast library of resources on any subject imaginable. Whether youre a student looking for textbooks, a professional seeking industry-specific manuals, or someone interested in self-improvement, these digital resources provide an efficient and accessible means of acquiring knowledge. Moreover, PDF books and manuals offer a range of benefits compared to other digital formats. PDF files are designed to retain their formatting regardless of the device used to open them. This ensures that the content appears exactly as intended by the author, with no loss of formatting or missing graphics. Additionally, PDF files can be easily annotated, bookmarked, and searched for specific terms, making them highly practical for studying or referencing. When it comes to accessing 20kdx 2service Manual books and manuals, several platforms offer an extensive collection of resources. One such platform is Project Gutenberg, a nonprofit organization that provides over 60,000 free eBooks. These books are primarily in the public domain, meaning they can be freely distributed and downloaded. Project Gutenberg offers a wide range of classic literature, making it an excellent resource for literature enthusiasts. Another popular platform for 20kdx 2service Manual books and manuals is Open Library. Open Library is an initiative of the Internet Archive, a non-profit organization dedicated to digitizing cultural artifacts and making them accessible to the public. Open Library hosts millions of books, including both public domain works and contemporary titles. It also allows users to borrow digital copies of certain books for a limited period, similar to a library lending system. Additionally, many universities and educational institutions have their own digital libraries that provide free access to PDF books and manuals. These libraries often offer academic texts, research papers, and technical manuals, making them invaluable resources for students and researchers. Some notable examples include MIT OpenCourseWare, which offers free access to course materials from the Massachusetts Institute of Technology, and the

Digital Public Library of America, which provides a vast collection of digitized books and historical documents. In conclusion, 20kdx 2service Manual books and manuals for download have transformed the way we access information. They provide a cost-effective and convenient means of acquiring knowledge, offering the ability to access a vast library of resources at our fingertips. With platforms like Project Gutenberg, Open Library, and various digital libraries offered by educational institutions, we have access to an ever-expanding collection of books and manuals. Whether for educational, professional, or personal purposes, these digital resources serve as valuable tools for continuous learning and self-improvement. So why not take advantage of the vast world of 20kdx 2service Manual books and manuals for download and embark on your journey of knowledge?

FAQs About 20kdx 2service Manual Books

What is a 20kdx 2service Manual PDF? A PDF (Portable Document Format) is a file format developed by Adobe that preserves the layout and formatting of a document, regardless of the software, hardware, or operating system used to view or print it. **How do I create a 20kdx 2service Manual PDF?** There are several ways to create a PDF: Use software like Adobe Acrobat, Microsoft Word, or Google Docs, which often have built-in PDF creation tools. Print to PDF: Many applications and operating systems have a "Print to PDF" option that allows you to save a document as a PDF file instead of printing it on paper. Online converters: There are various online tools that can convert different file types to PDF. **How do I edit a 20kdx 2service Manual PDF?** Editing a PDF can be done with software like Adobe Acrobat, which allows direct editing of text, images, and other elements within the PDF. Some free tools, like PDFescape or Smallpdf, also offer basic editing capabilities. **How do I convert a 20kdx 2service Manual PDF to another file format?** There are multiple ways to convert a PDF to another format: Use online converters like Smallpdf, Zamzar, or Adobe Acrobats export feature to convert PDFs to formats like Word, Excel, JPEG, etc. Software like Adobe Acrobat, Microsoft Word, or other PDF editors may have options to export or save PDFs in different formats. **How do I password-protect a 20kdx 2service Manual PDF?** Most PDF editing software allows you to add password protection. In Adobe Acrobat, for instance, you can go to "File" -> "Properties" -> "Security" to set a password to restrict access or editing capabilities. Are there any free alternatives to Adobe Acrobat for working with PDFs? Yes, there are many free alternatives for working with PDFs, such as: LibreOffice: Offers PDF editing features. PDFsam: Allows splitting, merging, and editing PDFs. Foxit Reader: Provides basic PDF viewing and editing capabilities. How do I compress a PDF file? You can use online tools like Smallpdf, ILovePDF, or desktop software like Adobe Acrobat to compress PDF files without significant quality loss. Compression reduces the file size, making it easier to share and download. Can I fill out forms in a PDF file? Yes, most PDF viewers/editors like Adobe Acrobat, Preview (on Mac),

or various online tools allow you to fill out forms in PDF files by selecting text fields and entering information. Are there any restrictions when working with PDFs? Some PDFs might have restrictions set by their creator, such as password protection, editing restrictions, or print restrictions. Breaking these restrictions might require specific software or tools, which may or may not be legal depending on the circumstances and local laws.

Find 20kdx 2service Manual :

chiltons repair and tune-up guide audi fox
childrens bible stories puzzle
china a cultural and historical dictionary
chinese ceramic vebels 500 1000 ad
childrenss old and rare catalogue number one
childrens illustrated bible classic stories set in religious and historical context
chiltons repair and tune-up guide chevrolet 1968-1975
chiltons foreign car repair manual volume 2
chilton ford service manual annual edition chilton ford mechanical service manual
chiltons repair and tune-up guide dodge/plymouth vans.
childrens of chanukah
chinese and asian cookbook
~~childrens stories of the bible from the~~
china new age new outlook
childrens songs for guitar 100 songs for early childhood

20kdx 2service Manual :

B-APT Form D Aptitude Test It is a work sample test in which the examinee writes coded instructions to a "computer" in a logical sequence to carry out program specifications. The ... Company wants me to take a test called the "Berger ... The idea behind the test is to evaluate the logic and reasoning abilities of the person taking it to see if they're worth training as a ... B-APT Advanced Form Aptitude Test 25 Test Questions. 2 hours to administer. Scored at Psychometrics. The B-APT AF is an advanced form of the B-APT, covering basic ... What questions are asked in Berger Paints TSTO written test? Jan 16, 2018 — In quantative aptitude section , major questions were on areas, ages , ratio and proportion, compound interest, linear

equation problems, ... Practice for Your Roland Berger Korn Ferry Assessment Test These tests evaluate one's behavioural competencies, experiences, personality traits, and motivators. Korn Ferry provides a number of different aptitude tests ... How to Ace the Roland Berger Analytical Test The sample test contains questions that test a candidate's ability to interpret data presented in multiple formats such as qualitative, quantitative, or ... Roland Berger Analytical Test: How to crack the RB ... - YouTube Anybody ever take the Berger Aptitude Test? Jul 11, 2007 — It's supposedly a test given to prospective computer programmers to see if they have any potential (presumably it checks that they have basic ... Berger Paints Nigeria Plc Aptitude Test Questions Berger Paints Nigeria Plc Aptitude Test Past Questions and Answers. We have collated various aptitude test past questions and answers in our database. The Laughing Classroom: Everyone's Guide to Teaching ... The book gives teachers 50 ways to say “you did OK,” 15 play breaks, and humorous homework assignments to make the task fun. This edition includes a new ... The Laughing Classroom THE LAUGHING CLASSROOM; EVERYONE'S GUIDE TO TEACHING WITH HUMOR AND PLAY. This book helps move teachers from a "limiting" teaching style to a "laughing ... The Laughing Classroom: Everyone's Guide to Teaching ... The Laughing Classroom: Everyone's Guide to Teaching with Humor and Play. By Diana Loomans, Karen Kolberg. About this book ... The Laughing Classroom: Everyone's Guide to Teaching ... The book gives teachers 50 ways to say "you did OK," 15 play breaks, and humorous homework assignments to make the task fun. This edition includes a new ... The Laughing Classroom: Everyone's Guide to Teaching ... Apr 1, 1993 — Read 9 reviews from the world's largest community for readers. What distinguishes a boring classroom from a learning classroom? Laughter. Everyone's Guide to Teaching with Humor and Play: Diana ... The Laughing Classroom: Everyone's Guide to Teaching with Humor and Play is a Used Trade Paperback available to purchase and shipped from Firefly Bookstore ... The Laughing Classroom: Everyone's Guide to Teaching ... What distinguishes a boring classroom from a learning classroom? Laughter. This book helps move teachers from a "limiting" teaching style to a "laughing" ... The Laughing Classroom: Everyone's Guide to Teaching ... THE LAUGHING CLASSROOM is packed with hands-on techniques for applying humor & play to all aspects of teaching--techniques that have been successful for ... The Laughing Classroom, Everyone's Guide to Teaching ... by J Morgan · 1995 · Cited by 1 — The Laughing CIassroom is filled with hands-on techniques to try in any situation. From one-minute warm-ups (making three faces, passing the compliment, mental ... The Laughing Classroom: Everyone's Guide to Teaching ... The Laughing Classroom: Everyone's Guide to Teaching with Humor and Play (Loomans, Diane) by Loomans, Diana; Kolberg, Karen - ISBN 10: 0915811995 - ISBN 13: ... LetraTag User Guide With your new DYMO LetraTag® label maker, you can create a wide variety of high-quality, self-adhesive labels. You can choose to print your labels in many ... User Guide LetraTag® 100H LetraTag®. User Guide. About Your New Labelmaker. With your new DYMO LetraTag™ labelmaker, you can create a wide variety of high-quality, self-adhesive labels ... Quick Reference Guide by DY Label · Cited by 162 — dymo.comfor a complete User Guide, and for information on obtaining labels for your label maker. Product Registration.

Visit ... LetraTag User Guide With your new DYMO LetraTag® labelmaker, you can create a wide variety of high-quality, self-adhesive labels. You can choose to print your labels in many. User Guide LetraTag® 200B LetraTag® 200B. User Guide. About Your New Label Maker. With the DYMO® LetraTag® 200B electronic label maker, you can create a wide variety of high-quality ... Dymo LetraTag LT100H User Guide (21455) Dymo LetraTag LT100H User Guide (21455). The Dymo LetraTag LT100H is a handheld label maker, perfect for use around the home or office. User manual Dymo LetraTag XR (English - 36 pages) Manual. View the manual for the Dymo LetraTag XR here, for free. This manual comes under the category label printers and has been rated by 248 people with ... User manual Dymo LetraTag LT-100H (English - 20 pages) Manual. View the manual for the Dymo LetraTag LT-100H here, for free. This manual comes under the category label printers and has been rated by 21 people ... Dymo User Manual Dymo 1575 Embosser User's Manual Download (PDF Format). $0.00. Add to Cart. Dymo ... LetraTAG QX50 user guide. Quick view. Dymo LetraTAG QX50 Labelmaker User's ... Dymo LetraTag LT-100H Manual Jul 9, 2019 — Learn everything you need to know about the DYMO LetraTag LT-100H label maker with this comprehensive user manual. From inserting batteries ...